rev.	revision text:	rev.date:	rev.by:	aprv. date:	aprv. by:
02	general simplification	2023-12-04	MicNaeb	2023-12-04	MicNaeb

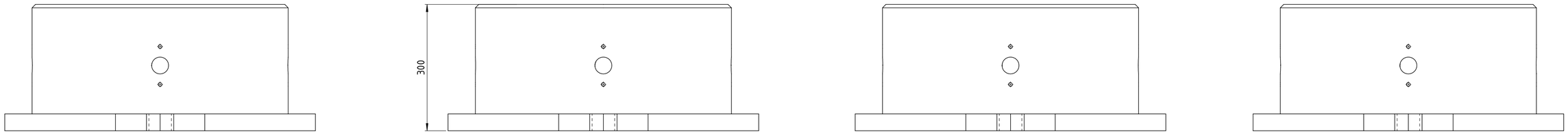

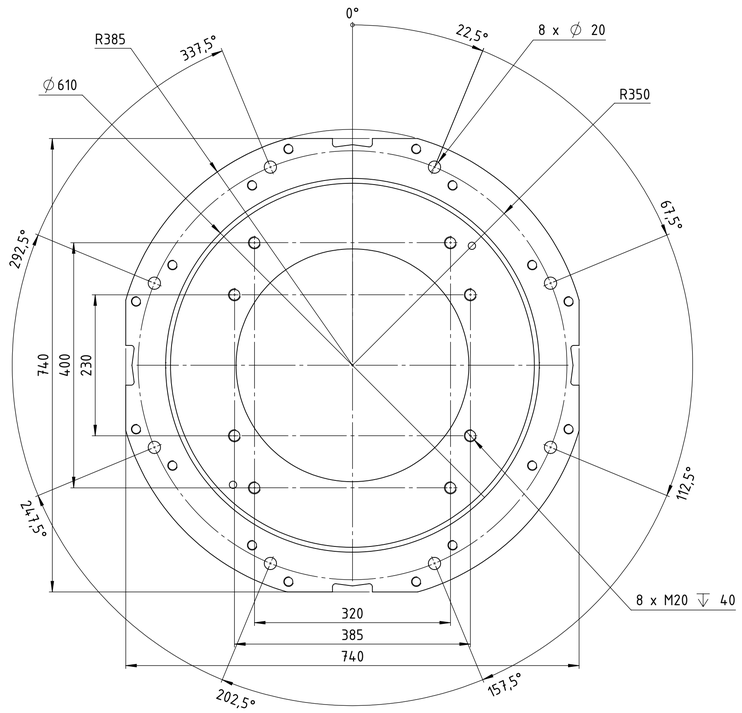

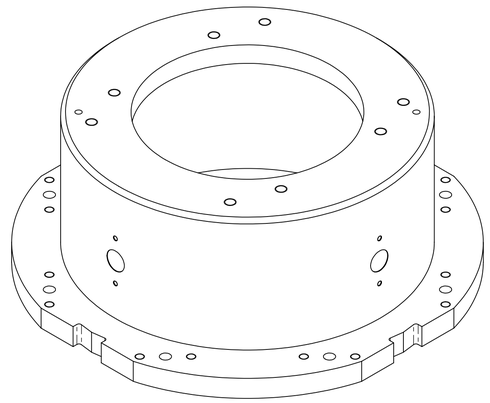

status: Released
SAP EMEA no:
SAP AM no: 230755

YASKAWA
www.yaskawa.eu.com

where nothing else is indicated
tolerances: DIN ISO 2768-mH
welding: DIN EN ISO 13920-A
no sharp edges

title / description:
robot stand
M-300

dimension:		weight: 121,120 kg
created:	2023-07-19	MicNaeb
drawn:	2023-07-19	MicNaeb
approved:	2023-07-19	RaSeid
drawing-no.: 0001060784-100		revision: 02

sheet: A1
15 / 475

The reproduction, distribution and utilization of this document as well as the communication of its contents to others without express authorization is prohibited. Offenders will be held liable for the payment of damages. All rights reserved in the event of the grant of a patent, utility model or design.